INTERNATIONAL JOURNAL OF ADVANCED INNOVATIVE TECHNOLOGY IN ENGINEERING

Published by Instigative Research Private Limited Home page: www.ijaite.co.in

Review on development of Real-Time Monitoring and Safety Protection System to Prevent Accidents in Electric Vehicles

[1]Dr. Lowlesh Nandkishor Yadav, [2]Prof. Shubhangi Satdeve, [3]Prof. Akshata Kumbhar
[123]Department of Computer Engineering, Suryodaya College of Engineering and Technology, Nagpur, Maharashtra, India.

[1]lowlesh.yadav@gmail.com, [2]satdeveshubhangi@gmail.com
[3]akshatakumbhare26@gmail.com

Article History

Received on: 20 July 2026
Revised on15 Aug 2026
Accepted on: 20 Sept 2026

Keywords: Fire Situation, Controller, Emergency Alert, Accident Prevention, IOT Technology

e-ISSN: 2455-6491

DOI: 10.65809/IJAITE/26/v03sp02/036

Production and hosted by
www.insightiveinc.org

©2026|All right reserved.

ABSTRACT

Today, fire accidents often occur in homes and industrial environments, where climate change and human negligence can be predicted. The proposed prototype is designed to detect such fire accidents and remotely extinguish the fire from the user, thus reducing the risk to firefighters. The main idea of this concept is to propose a model that focuses on the cost-effective design and implementation of an automatic fire protection system for electric vehicles. In this system, the fire extinguisher is activated when it detects flame/smoke in the vehicle fire area and extinguishes the fire automatically. There are many reasons for an electric vehicle that can cause fire accidents. The main cause of electric car fires is the battery used in them. The installation of an automatic extinguishing system allows to minimize the financial losses that can arise from a fire and to increase the safety level of the vehicle, passengers, and other road users.

1. INTRODUCTION

Fire accident is a very common phenomenon in our country. Many fortunes and lives are at stake. As a developing country, we do not have modern technology to solve this problem. The core sector of firefighting has limits to overcome. Sometimes the police, army comes to help them in the shooting. But that is not enough. Electric vehicle batteries introduce new safety challenges to the vehicle development process, and rigorous testing must be performed to ensure minimal fire risk. Research has shown that electrical systems are among the top four causes of car fires. The purpose of the proposed system is to build a controllable vehicle that can be installed in a domestic or industrial environment and that alerts the user in case of fire. The user can drive this vehicle by controlling the mobile phone to the designated place where there is a fire accident and spray water to extinguish the fire by controlling the mobile phone. The user can also control the speed, amount and direction of the water while spraying. The developed vehicle can be remotely monitored from the mobile screen to control the movement of the vehicle and thus the user can interact with it to extinguish the fire effectively. IoT (Internet of Things) integration allows the guided

vehicle to organize, analyze and process data, allowing the user to make optimal decisions in real time. In this way, possible damage caused by fire can be significantly reduced before the arrival of the extinguishing unit, and the risk of the participation of the extinguishing team can also be minimized. The probability of human loss and/or injury in a typical car fire accident can be reduced by an automatic door opening system. However, firefighters are people who dedicate themselves to extinguishing fires even at the cost of their lives. So this research aims to minimize human involvement to prevent fire accidents.

2. PROBLEM DEFINITION

• Studies have shown that electrical systems are among the top four causes of car fires. Many people think that only full electric and hybrid vehicle batteries are problematic and can cause fires.
• A few years ago, at the end of 2013, the Tesla Model S, recognized by the media as the safest car in the world, caught fire.
• The concerns and risks related to electric or hybrid cars are by no means over. Every new design or model comes with even more risks.

i. Battery overcharging
ii. Battery electrolyte leakage
iii. Short circuit in electric components\niv. Road crash



Figure 1: Electric Vehicle on Fire situation



Figure 2: Buses caught fire and totally buried

3. LITERATURE REVIEW

Vehicle motion is dictated by a combination of sensor-based inputs and user control. When the fire detection sensor detects a fire, the signal is immediately transmitted to the controller. The IOT modules are activated to notify the user of a fire accident. Once the alarm is received, the user can direct the vehicle to the desired location to extinguish the fire using the Blynk software and built-in camera module. A servo motor connected to the extinguishing hose can control the direction and amount of sprayed water. The controls for the servo motors are included with the user. The proposed fire truck is designed to run on the Internet of Things (IoT), allowing the user to control the fire from anywhere.

Z. Xie et al., 2024:

Multi-parameter fusion early-warning framework combining voltage, temperature, and gas indicators; cloud model and Dempster–Shafer evidence theory reduce false alarms and handle uncertainty.

W.C. Tam et al., 2024:

Acoustics plus deep learning for early-stage thermal runaway detection; acoustic sensing is proposed as a complementary non-invasive channel.

J.D. Oh, 2024:

Mechanical and nozzle design strategies for upward liquid spray suppression of EV battery fires; targeted cooling improves heat removal.

J. Zhao et al., 2024:

Machine-learning prognostics using voltage, current, temperature and impedance; recommends edge models for immediate protection and cloud ML for fleet analytics.

A. Alawi et al., 2025:

Review of active, passive and hybrid battery thermal-management systems; emphasizes temperature homogeneity and sensor-feedback control.

X. Li et al., 2025:

Integrated thermal management and coordinated control across battery, power electronics and HVAC; digital twins and IoT telemetry enable closed-loop optimization.

S. Lee et al., 2024:

Comparison of EV battery-fire dynamics and suppression; supports early detection, targeted water cooling and module isolation.

Nizar Al Bassam & S.A. Hussain, 2020:

Embedded IoT prototype combining flame/smoke sensing, GPS/Internet notifications and actuator control for vehicle-fire suppression.

C.H. Lee et al., 2023:

IoT real-time fire detection using Raspberry Pi and fisheye camera; edge processing reduces bandwidth while preserving detection performance.

Jerome Workman, 2025:

Review of optical/infrared sensors for non-contact thermal monitoring; supports multi-sensor fusion for spatial hotspot detection.

TABLE 3: Comparative Analysis Of Existing Ev Fire-Safety Approaches

Study / Approach	Primary sensing or method	Main contribution	Limitation / gap
Z. Xie et al. (2024)	Voltage + temperature + gas	Earlier, more reliable alarms through evidence fusion	Needs multi-modal sensing and fusion framework
W.C. Tam et al. (2024)	Acoustic + deep learning	Detects early thermal-runaway signatures	Model/data dependent; complementary sensor
J.D. Oh (2024)	Upward liquid spray	Improves targeted battery cooling	Focuses on suppression hardware, not full monitoring
J. Zhao et al. (2024)	Multi-modal ML prognostics	Predicts thermal runaway/RUL	Requires suitable failure data and model validation
A. Alawi et al. (2025)	BTMS: air/liquid/phase-change	Improves thermal homogeneity and control	Thermal management is broader than fire detection
Al Bassam & Hussain (2020)	Flame/smoke + IoT	Remote alerts and actuator control	Robustness and suppression-agent issues
C.H. Lee et al. (2023)	Camera + edge/cloud IoT	Fast edge detection with cloud alerts	Forest-fire context; EV adaptation required
Proposed system	Temperature + smoke + photoelectric/flame + IoT	Real-time monitoring, alerts, cooling and suppression	Prototype requires further full-scale EV validation

4. RESEARCH GAP

- Limited real-time detection systems: Existing EV fire safety measures rely mainly on passive extinguishers or manual monitoring, lacking proactive IoT-enabled detection and intervention.
- Single-parameter monitoring: Most studies focus only on temperature or smoke detection, but do not integrate multi-sensor fusion (temperature, smoke, flame) for higher accuracy.
- Slow response mechanisms: Conventional systems detect fire only after significant damage has begun; early-warning and automated suppression methods remain underexplored.
- Lack of IoT-cloud integration: Few works connect vehicle-level fire detection directly to cloud platforms for remote alerts to authorities and stakeholders.
- Minimal experimental validation: Many models remain theoretical or simulation-based, with limited working prototypes tested in real EV environments.
- Cost and scalability challenges: Existing advanced safety systems are expensive and difficult to adapt for widespread EV adoption, especially in developing countries.

5. BLOCK DIAGRAM

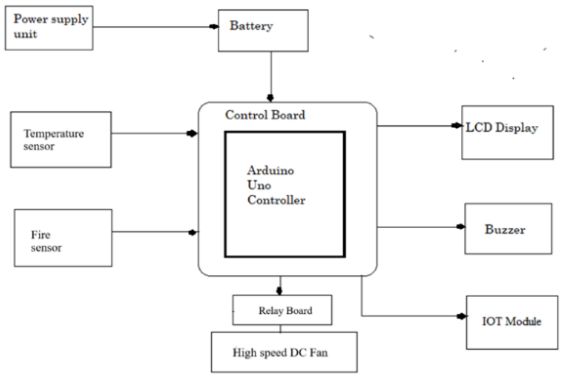

Figure 4: Block Diagram of System

6. WORKING

The system is designed to monitor and manage the temperature of the battery inside an Electric Vehicle (EV) to prevent overheating and potential damage. It uses a combination of sensors, a microcontroller, and cooling mechanisms for efficient operation.

When the battery temperature rises, sensors such as a smoke sensor, photoelectric sensor, and temperature sensor detect the situation. The smoke sensor and photoelectric sensor monitor the presence of smoke, while the temperature sensor continuously measures the thermal condition of the battery. If abnormalities are detected, the sensors send their readings to the Arduino microcontroller for processing.

The microcontroller evaluates the sensor data. If smoke or signs of overheating are detected, it activates a buzzer, displays warnings on the LCD, and triggers the IoT module to send remote notifications. When overheating is detected, the microcontroller also starts the high-speed DC fan to dissipate heat and reduce the temperature.

This provides real-time monitoring and rapid response, while IoT communication enables remote tracking and alerts.

7. MAIN FEATURES

- Multi-Sensor Monitoring: Integrates temperature, smoke, and flame sensors for early detection of fire hazards.
- Real-Time Alerts: Provides immediate notifications through buzzer, LCD display, and indicator lights.

- Automated Cooling System: High-speed DC fan activates automatically to reduce battery temperature.
- Automatic Fire Suppression: Relay-controlled fire extinguisher system triggers suppression when flame or smoke is detected.
- IoT-Enabled Communication: Cloud-connected module transmits real-time alerts to vehicle owners, emergency responders, and authorities.
- Remote Monitoring and Control: Users and authorities can monitor vehicle safety remotely and take action via IoT applications.
- Cost-Effective and Compact Design: Designed for integration into various EV models.
- Low Power Consumption: Optimized circuitry supports continuous monitoring with minimal energy use.
- Scalable Architecture: Can be adapted to different EV types, battery sizes, and fleet applications.
- Enhanced Safety and Reliability: Reduces risk to passengers and protects property.

8. SCOPE OF THE STUDY

- Development of a smart fire and safety protection system integrated into electric vehicles using IoT.
- Continuous monitoring of temperature, smoke, and short-circuit conditions in the EV battery compartment.
- Real-time data transmission and early-warning alerts through IoT communication.
- Automatic activation of cooling fans, water sprinklers, and buzzer alarms during hazardous conditions.
- Improved driver/passenger safety and protection of vehicle components from fire hazards.
- Energy-efficient, cost-effective and compact integration for practical EV applications.
- Provision for automatic battery power cutoff during emergencies.
- Extension to public transportation, logistics fleets, and two-wheelers.

9. SIGNIFICANCE OF STUDY

- Enhances EV passenger and vehicle safety through real-time fire and temperature monitoring.
- Reduces thermal-runaway risk through automatic cooling, sprinkler, and alarm systems.
- Provides early IoT alerts to users and fleet managers.
- Promotes confidence in EV technology and safer electric mobility.
- Minimizes vehicle damage and costly repairs.
- Supports sustainable and reliable transportation.
- Demonstrates cost-effective electronic components for practical implementation.
- Encourages IoT integration with safety-critical automotive systems.

ADVANTAGES

- Real-time monitoring of battery temperature.
- Enhanced safety against thermal runaway, fire, or explosion.
- Efficient cooling through high-speed DC fans.
- Remote real-time notification through IoT.
- User-friendly LCD status display.
- Cost-effective prevention of damage.
- Low maintenance requirements.

APPLICATIONS

- Electric Vehicles
- Renewable Energy Systems
- Data Centers
- Portable Electronics
- Industrial Systems
- Aerospace

CONCLUSION

The integration of a Smart Safety System for Electric Vehicles (EVs) using IoT is crucial for enhancing the safety, performance, and longevity of EV batteries. The system monitors key battery parameters such as temperature and smoke and provides real-time alerts through IoT connectivity. In case of overheating or potential fire hazards, it automatically activates high-speed cooling fans or extinguishing units. Its simple, compact and cost-effective design supports practical integration, while remote monitoring enables prompt action. Continued research and development could extend the system to different battery types and sizes and improve EV reliability and user confidence.

REFERENCES

[1] Z. Xie, Y. Liu, H. Zhang, and L. Chen, "The Multi-Parameter Fusion Early Warning Method for Lithium-Ion Battery Thermal Runaway," Batteries, MDPI, 2024.
[2] W.C. Tam, J. Park, and M. Singh, "Development of a Robust Early-Stage Thermal Runaway Detection Model for Lithium-Ion Batteries," NIST Publication, 2024.
[3] J.D. Oh, "Improving Fire Suppression Efficiency in Electric Vehicles," Fires, MDPI, 2024.
[4] J. Zhao, X. Wang, and H. Li, "Battery Safety: Machine Learning-Based Prognostics," Energy Storage, ScienceDirect, 2024/2025.
[5] A. Alawi, M. Khan, and S. Ali, "A Comprehensive Review of Battery Thermal Management Systems (BTMS) for EVs," Energies, MDPI, 2025.

[6] X. Li, Y. Zhang, and P. Kumar, "Towards Integrated Thermal Management Systems in EVs: Review and Perspectives," ScienceDirect Review, 2025.
[7] S. Lee, J. Kim, and H. Park, "Assessing Fire Dynamics and Suppression Techniques in Lithium-Ion Battery Fires," Fire Safety Journal, ScienceDirect, 2024.
[8] N. Al Bassam and S.A. Hussain, "IoT Based Autonomous Fire Suppression System for Vehicles," IC-ETITE Conference, IEEE, 2020.
[9] C.H. Lee, K. Choi, and S. Lim, "Development of IoT-Based Real-Time Fire Detection System," Applied Sciences, MDPI, 2023.
[10] "Smart Optical Sensors for Thermal Management in EVs," Spectroscopy Online (summary of Energies review), 2025.
[11] J. Chen, H. Wang, H. Yin, Y. Luo, and H. Zhang, "A real-time monitoring system for lithium-ion battery based on Arduino platform," 2017 IEEE 3rd International Conference on Energy Engineering and Information Management (EEIM), 2017, pp. 105-108.
[12] M. Z. Rahman and A. I. Al-Odienat, "Real-time monitoring system for electric vehicle battery management using Internet of Things (IoT)," 2019 IEEE 5th International Conference on Control, Automation and Robotics (ICCAR), 2019, pp. 853-858.
[13] Raza and M. H. Zafar, "Design and development of an intelligent battery management system for electric vehicles using Arduino," 2019 2nd International Conference on Electrical, Communication, Electronics, Instrumentation and Computing (ICECEIC), 2019, pp. 1-6.
[14] R. Kumar and S. K. Sharma, "IoT based real-time monitoring system for electric vehicle battery management using Arduino," 2020 2nd International Conference on Inventive Research in Computing Applications (ICIRCA), 2020, pp. 1035-1041.
[15] K. Balan, V. Subramaniyaswamy, and M. Muthukumar, "Design and implementation of electric vehicle battery monitoring and management system using Arduino," 2019 IEEE International Conference on Innovative Research and Development (ICIRD), 2019, pp. 1- 5.
[16] N. I. Badruddin, N. J. Nawawi, M. Y. Yusof, M. A. H. Aziz, and A. Ahmad, "Design of battery monitoring system for electric vehicle using Arduino Uno," 2017 IEEE Conference on Energy Conversion (CENCON), 2017, pp. 260-263.
[17] S. O. Hjelle, P. Romano, and L. Solheim, "Real-time monitoring and control system for electric vehicle battery packs," 2018 IEEE International Conference on Industrial Technology (ICIT), 2018, pp. 1271-1276.
[18] K. E. H. Lai, K. C. Ng, W. T. Chan, C. H. T. Lee, and J. D. D. Eng, "Real-time monitoring system for electric vehicle battery management using Internet of Things (IoT) and machine learning techniques," 2020 IEEE International Conference on Consumer Electronics (ICCE), 2020, pp. 1-6.
[19] R. Suresh Kumar, S. Elango, M. Vijayan and, and S. A. Vijay, "Development of battery management system for electric vehicle using Arduino," 2018 International